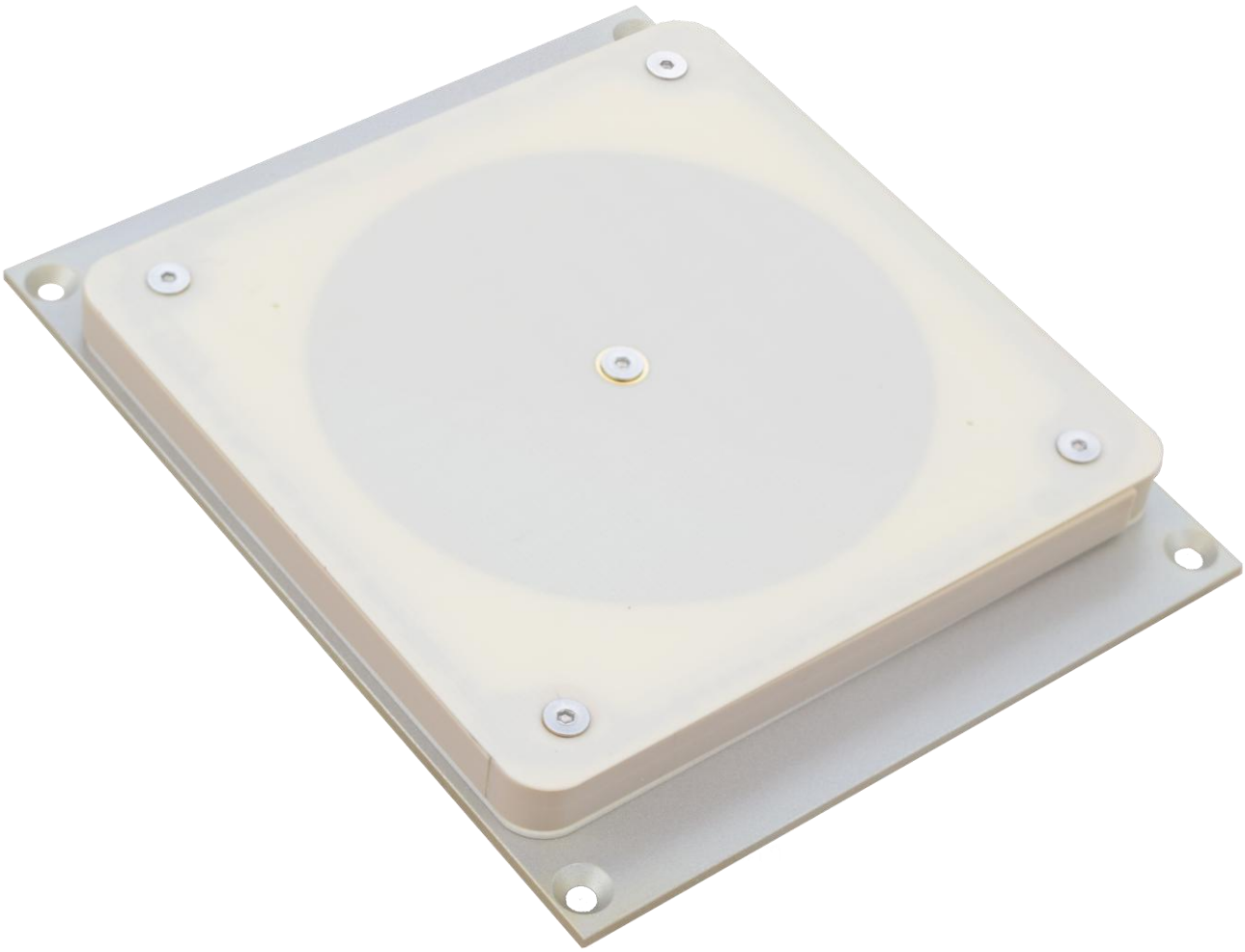

NanoCom
ANT2150-DUP
ANT2150-ISL

Datasheet
S-band active antenna

GomSpace A/S | Langagervej 6 | DK-9220 Aalborg East | Denmark
gomspace.com | sales@gomspace.com | T: +45 71 741 741

Product name: NanoCom ANT2150

Product variants: NanoCom ANT2150-DUP, NanoCom ANT2150-ISL

Document No.: 1010651

Revision: 3.0

Author: KATU

Approved by: FIHA

Approval date: 28-04-2026

Confidentiality Notice

This document is submitted for a specific purpose as agreed in writing and contains information, which is confidential and proprietary. The recipient agrees by accepting this document, that this material will not be used, transferred, reproduced, modified, copied or disclosed in whole or in part, in any manner or to any third party, except own staff to meet the purpose for which it was submitted without prior written consent.

GomSpace © 2026

1 Table of Contents

2 OVERVIEW 4
2.1 Highlighted Features 4
2.2 Block Diagram 5
2.3 Functional Description 5
2.3.1 ISL Version 5
2.3.2 DUP Version 6
2.4 Calibration and Setup 6

3 VERSIONS 7
3.1 Inter Satellite Link (ISL) and Profile 7
3.2 Duplex (DUP) 7
3.3 Mounting Plate 7
3.3.1 Type A 7
3.3.2 Type B 7
3.3.3 Type C 8
3.3.4 Type D 8

4 CONNECTOR PINOUT 10
4.1 Connector Location Top 10
4.1.1 J102 - RX RF COAXIAL CONNECTOR 10
4.1.2 J300 - TX RF COAXIAL CONNECTOR 10
4.1.3 J400 - Power Connector 11
4.1.4 J401 - Control Connector 11
4.1.5 J402 - Debug 11

5 DATA INTERFACE 12

6 DEBUG INTERFACE 12

7 ABSOLUTE MAXIMUM RATINGS 12

8 ELECTRICAL CHARACTERISTICS 12

9 PHYSICAL CHARACTERISTICS 12

10 RF PERFORMANCE CHARACTERISTICS 13
10.1 Receiver ISL 13
10.2 Receiver DUP 13
10.3 Transmitter 13

11 ANTENNA PERFORMANCE 14
11.1 Antenna Gain 14
11.2 Axial Ratio 16
11.3 Half Power Beamwidth 17
11.4 Port Matching 17

12 MECHANICAL DRAWING 18
12.1 Type A 18
12.2 Type B 19
12.3 Type C 20
12.4 Type D 21

© 2026 GomSpace A/S
All printed copies, and all electronic copies and versions except the one accessible on the GomSpace A/S server, are considered uncontrolled copies used for reference only.

2 Overview

GomSpace NanoCom ANT2150-DUP and ANT2150-ISL are active antennas (frontends with integrated antennas) specifically designed for interfacing with GomSpace SDR transceivers.

Several mounting versions are available depending on placement on a nano satellite.

The active antenna is built as a sandwich around a shield/mounting plate. The RF signal connection between the antenna and electronics PCBs are made with RF compression connectors. This construction allows flexible mounting on several different satellite structures – just by changing the shield/mounting plate.

Two pictures here below show the top and the bottom of the antenna, all versions are similar in appearance.



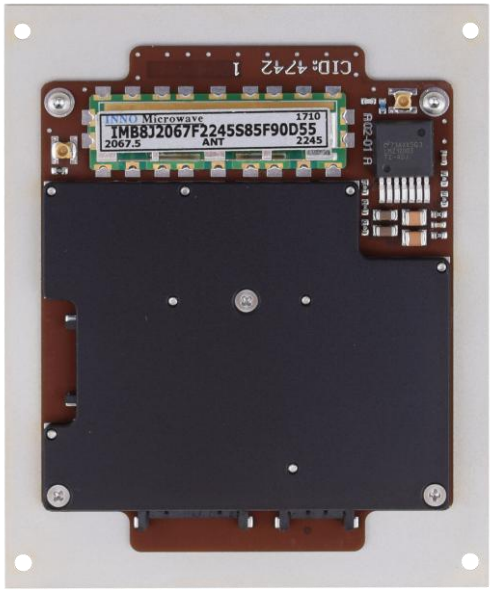

2.1 Highlighted Features

- Integrated antenna and PA/LNA result in low loss and optimum RF performance.
- Duplex filter-based design results in optimum co-existence with other RF transceivers on board.
- Flexible sandwich construction allows flexible mounting on different satellite structures – just by changing the shield/mounting plate.
- Shielded electronics.
- Flexible power interface (VIN 8-18 V).
- Default CAN-bus control interface.
- Medium gain (8 dBi) patch antenna with circular polarization.
- ANT2150 DUP version supports full duplex with RX in 2025-2110 MHz and TX in 2200-2290 MHz.
- ANT2150 ISL version supports time division duplex (TDD) in 2200–2290 MHz frequency band.
- Temperature sensors (one sensor for PA and one in the microcontroller).
- Input current sensor (for monitoring VIN current above 300mA).
- PCB material:
  - Electronics Board: Glass/Polyimide IPC 6012C cl. 3
  - Antenna Module: Rogers RO4003C
- IPC-A-610 Class 3 assembly
- Compatible with GomSpace NanoCom Test Cap S

© 2026 GomSpace A/S
All printed copies, and all electronic copies and versions except the one accessible on the GomSpace A/S server, are considered uncontrolled copies used for reference only.

2.2 Block Diagram

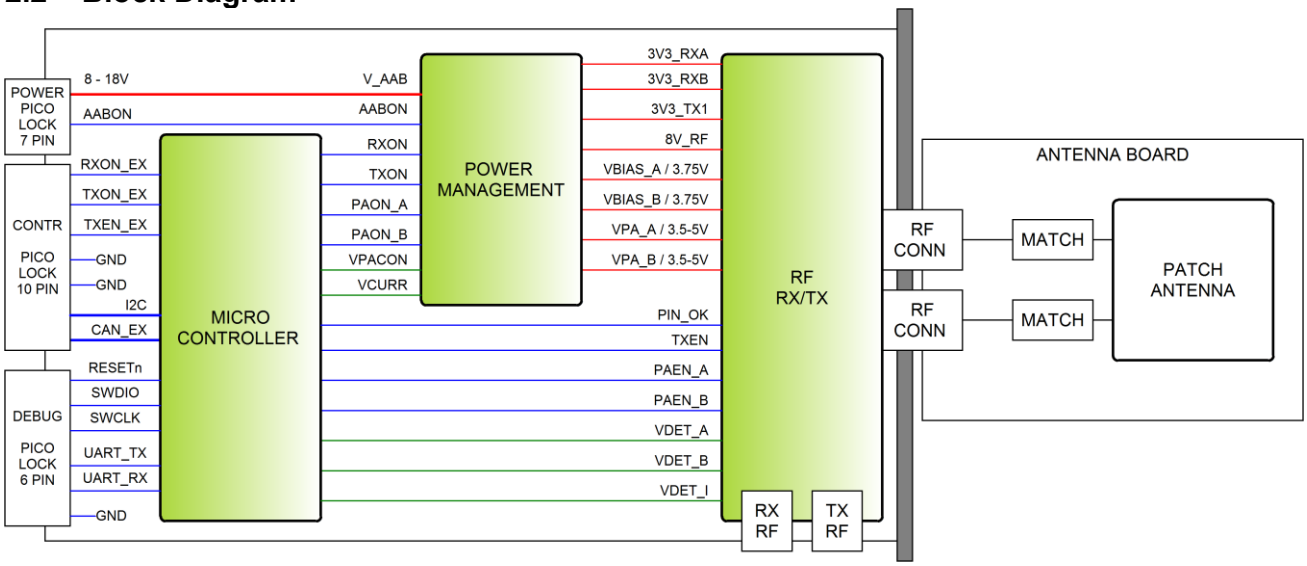

2.3 Functional Description

ANT2150 contains: a transmit power amplifier, a receive low noise amplifier, transmit/receive switch (ISL version), and necessary support circuits.

The antenna section includes matching components and the RF compression connectors. Stated antenna gain includes loss in matching circuit and in the RF connectors. During production/checkout it can be configured if the antenna should use RHCP or LHCP.

The transmitter chain includes a (pre) driver amplifier stage and a multistage balanced PA. Interstage SAW filters reduce broadband noise and provide stage isolation.

The receiver chain contains two LNAs again with interstage SAW filters to protect following stages from out-of-band interference.

All performance parameters for the electronics board and for the antenna module are given at the reference plane.

2.3.1 ISL Version

This front-end uses the same frequency band for RX and TX, which allows two ISL radio board to communicate using time division duplex.

© 2026 GomSpace A/S
All printed copies, and all electronic copies and versions except the one accessible on the GomSpace A/S server, are considered uncontrolled copies used for reference only.

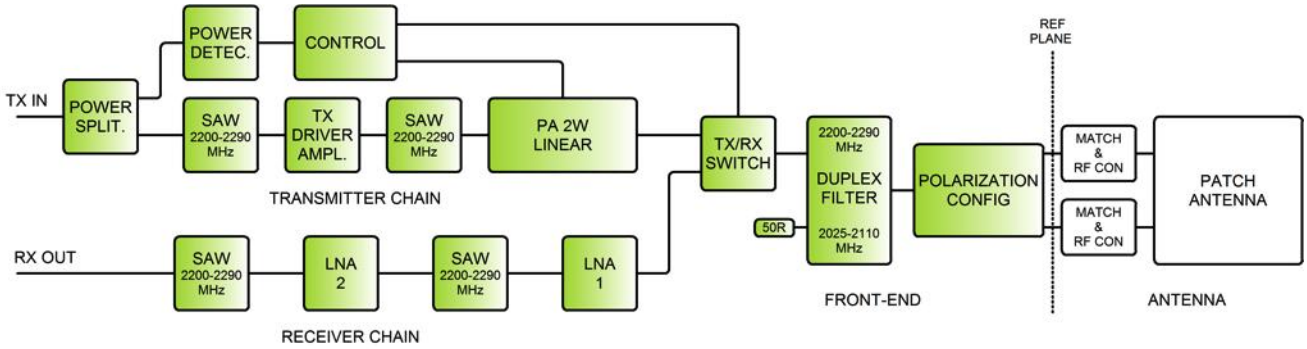

The ISL front-end has a TX/RX switch and uses a bandpass filter (half of duplex-filter) that reduces transmitter noise (broadband) significantly.

2.3.2 DUP Version

The DUP version is the same as the ISL version except for the TX/RX switch and the filters on the Receiver chain. This version is available for two different frequency bands (see section 3.2).

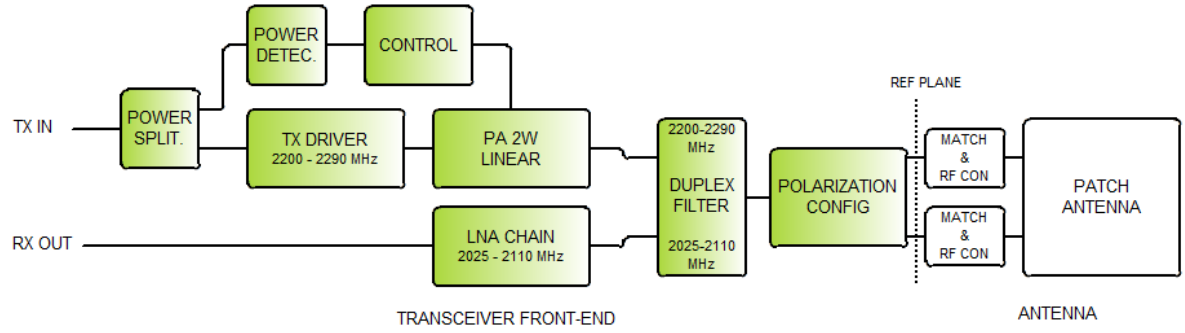

2.4 Calibration and Setup

During production check-out, several calibration values are stored in the board.

For the receiver calibration values describe the RX gain at 7 frequencies across the RX band. These values can be used to implement a compensated RSSI function. (Antenna gain is not included). The RSSI values can also be temperature compensated using stored calibration values for gain temperature dependency.

The transmitter calibration values are primarily used to set up the correct input power to reach a given output power (compensated for frequency and temperature). One calibration value describes the input power detector level for a -10 dBm center frequency carrier, which will allow the SDR platform to set this level independently of cable loss. All other input levels should be set relative to the calibrated -10 dB level.

The PA has three predefined bias levels (PL2, PL1, PL0), which are optimized for 2 W, 1 W, and 0.5 W or lower output power (see chapter 10.3). All levels are set for maximum -20 dBc adjacent channel power for a 500 ksymbol/s QPSK (RC 0.35) modulated signal.

© 2026 GomSpace A/S
All printed copies, and all electronic copies and versions except the one accessible on the GomSpace A/S server, are considered uncontrolled copies used for reference only.

3 Versions

When ordering the customer must make a choice of:

- PCB version – ANT2150-ISL or, ANT2150-DUP
- Antenna polarization (ISL default LHCP and DUP default RHCP)
- Mounting plate - depends on where the antenna is to be mounted
- CAN termination – whether the board shall be equipped with a 120ohm terminated resistor on its CAN interface

3.1 Inter Satellite Link (ISL) and Profile

	ANT2150-ISL	Unit
TX band	2200 - 2290	MHz
RX band	2200 - 2290 MHz	

3.2 Duplex (DUP)

	ANT2150-DUP	Unit
TX band	2200 - 2290	MHz
RX band	2025 - 2120	MHz

3.3 Mounting Plate

Four different mounting plates are available, depending on where the antenna is placed on a nanosatellite. They are all 1.5 mm aluminum. The 3U is used as an example; the plates can also be mounted on 1U and 2U nano satellite.

In all cases, regardless of which mounting plate is selected, it is recommended to perform a fit check with the structure to which the antenna is to be mounted as well as the launch pod. Mounting plate dimensions can be found in section 12 and CAD models are available through GomSpace home page.

Type A

Used in a 3U structure on the A-sides and on the 6U structure A-sides.	

Type B

© 2026 GomSpace A/S
All printed copies, and all electronic copies and versions except the one accessible on the GomSpace A/S server, are considered uncontrolled copies used for reference only.

The hole pattern of the Type B plate is compatible with the B-Side of a GomSpace 6U structure, but the outline of the PCB is not (see pictures) and modifications to the GomSpace 6U structure are needed to be able to mount the antenna.

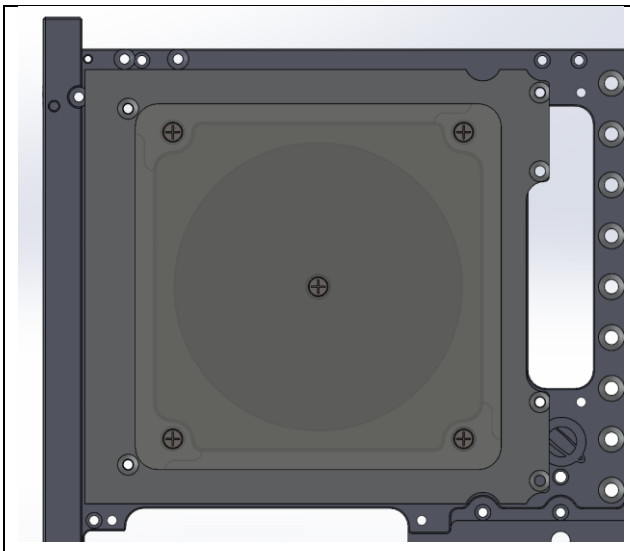	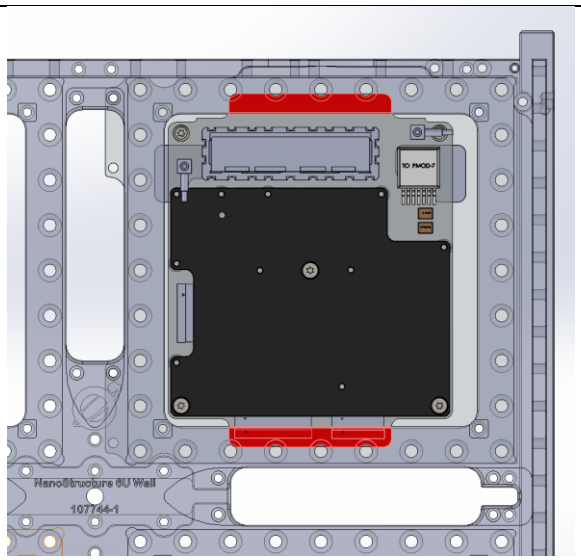

Type C

Used in the top or bottom of a 3U structure and not exceeding the height of the structure rails.	

3.3.1 Type D

Designed for use with the GomSpace NanoCom ANT-6F mounted on the top or bottom of a 6U structure. Precautions should be taken to ensure the launch-pod can accommodate the antenna exceeding the height of the structure rails.	

© 2026 GomSpace A/S
All printed copies, and all electronic copies and versions except the one accessible on the GomSpace A/S server, are considered uncontrolled copies used for reference only.

3.3.2

© 2026 GomSpace A/S
All printed copies, and all electronic copies and versions except the one accessible on the GomSpace A/S server, are considered uncontrolled copies used for reference only.

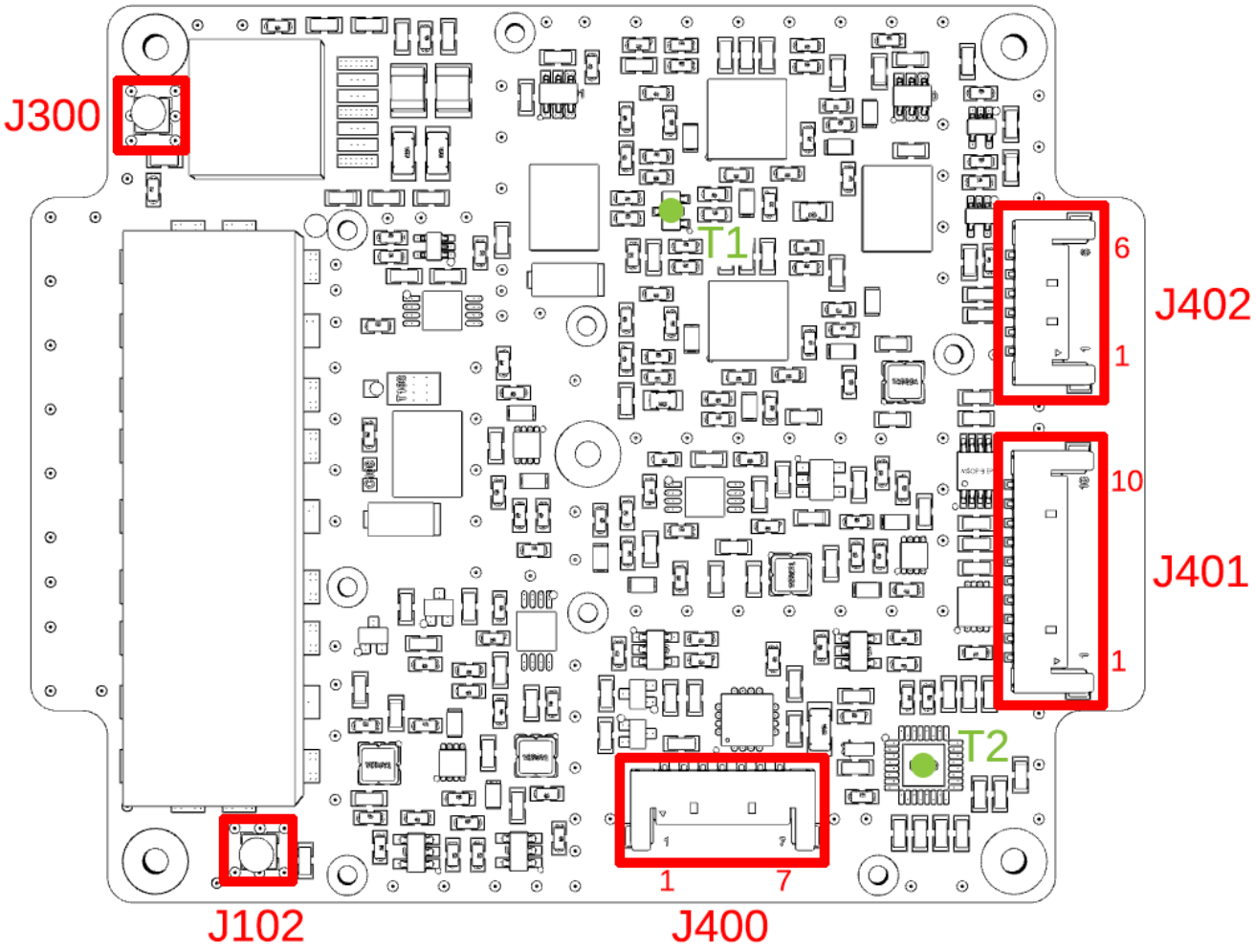

4 Connector Pinout

4.1 Connector Location Top

● Temperature sensors T1 - PA
T2 - Internal IC

4.1.1 J102 - RX RF COAXIAL CONNECTOR

Molex SSMCX 73413-0040

Pin	Name	Description
1	RX RF	Amplified received signal
2	GND	

4.1.2 J300 - TX RF COAXIAL CONNECTOR

Molex SSMCX 73413-0040

Pin	Name	Description
1	TX RF	Transmitter input signal
2	GND	

© 2026 GomSpace A/S
All printed copies, and all electronic copies and versions except the one accessible on the GomSpace A/S server, are considered uncontrolled copies used for reference only.

4.1.3 J400 - Power Connector

Molex Pico-Lock 1.50 mm pitch 504050-0791

Pin	Name	Description
1	AABON	External power control pin: Low < 0.4 V, High > 2.5 V (max 18V) Low: Antenna is OFF High: Antenna is ON (Antenna enters IDLE mode when AABON pin is asserted)
2	GND	
3	GND	
4	GND	
5	VIN	8 – 18 V supply voltage, externally switchable by AABON
6	VIN	8 – 18 V supply voltage, externally switchable by AABON
7	VIN	8 – 18 V supply voltage, externally switchable by AABON

4.1.4 J401 - Control Connector

Molex Pico-Lock 1.50 mm pitch 504050-1091

Pin	Name	Description
1	GND	
2	GND	
3	I2C_SCL	CSP I^2C bus communication
4	I2C_SDA	CSP I^2C bus communication
5	CANL	CSP CAN bus communication (Linear LTC2875 CAN transceiver used)
6	CANH	CSP CAN bus communication (Linear LTC2875 CAN transceiver used)
7	GND	
8	TXEN_EX	Select TX mode in manual duplex mode
9	TXON_EX	Power on TX circuit
10	RXON_EX	Power on RX circuit

4.1.5 J402 - Debug

Molex Pico-Lock 1.50 mm pitch 504050-0691

Pin	Name	Description
1	GND	
2	UART RX	GOSH serial communication
3	UART TX	GOSH serial communication
4	SWCLK	Firmware upload/debug
5	SWDIO	Firmware upload/debug
6	RESETn	Firmware upload/debug

© 2026 GomSpace A/S
All printed copies, and all electronic copies and versions except the one accessible on the GomSpace A/S server, are considered uncontrolled copies used for reference only.

5 Data Interface

ANT2150 use the CubeSat Space Protocol (CSP) to transfer data to and from CSP nodes on-board the main system bus. CSP is a routed network protocol that can be used to transmit data packets between individual subsystems on the satellite bus and between the satellite and ground station. For more information about CSP please read the documentation on libcsp.org and on Wikipedia:
http://en.wikipedia.org/wiki/Cubesat_Space_Protocol

It's possible to control the board via CAN (default) or I^2C.

6 Debug Interface

The debug interface is a USART that uses GomSpace Shell (GOSH) to present a console-like interface to the user. GOSH is a general feature present on GomSpace products.

The console can be used during checkout and satellite integration of the antennas to send commands and inspect/set parameters.

7 Absolute Maximum Ratings

Stresses above those listed under Absolute Maximum Ratings may cause permanent damage to the antennas. Exposure to absolute maximum rating conditions for extended periods may affect reliability.

Symbol	Description	Min.	Max.	Unit
VIN	Input Supply voltage	8.0	18.0	V
PIN	Supply power draw	-	11	W
P_{in}	Absolute maximum input power at TX and RX ports		5	dBm
T_{amb}	Operating Temperature	-40	85	°C
T_{stg}	Storage Temperature	-40	85	°C

8 Electrical Characteristics

Symbol	Description	Min.	Max.	Unit
P_{sup_off}	Supply power, OFF	-	1.8	mW
P_{sup_idle}	Supply power, IDLE	-	200	mW
P_{sup_rx}	Supply power, RX mode	-	800	mW
P_{sup_tx}	Supply power, TX STANDBY	-	600	mW
P_{sup_tx}	Supply power, TX ACTIVE	-	11250	mW

9 Physical Characteristics

Description	Value	Unit
Mass (approximate – depends on mounting etc)	~ 120	g
Size (see chapter 12)	98 x 98 x 20.1	mm

© 2026 GomSpace A/S
All printed copies, and all electronic copies and versions except the one accessible on the GomSpace A/S server, are considered uncontrolled copies used for reference only.

10 RF Performance Characteristics

10.1 Receiver ISL

Symbol	Description	Min.	Max.	Unit
Gain,rx	RX Avg. Gain, 25°C	32	42	dB
	Gain ripple 25°C	-4	4	dB
	Gain ripple -40°C to 85°C	-5	-5	dB
NF,rx	RX Noise Figure, 25°C	2.5 (typ)	3.3	dB
	RX Noise Figure, -40°C to 85°C		3.8	dB
Freq, rx	RX frequency band	2200	2290	MHz

10.2 Receiver DUP

Symbol	Description	Min.	Max.	Unit
Gain,rx	RX Avg. Gain, 25°C	39	45	dB
	Gain ripple 25°C	-4	4	dB
	Gain ripple -40°C to 85°C	-5	-5	dB
NF,rx	RX Noise Figure, 25°C	2.0 (typ)	2.5	dB
	RX Noise Figure, -40°C to 85°C		3.0	dB
Freq, rx	RX band (ANT-2150-DUP)	2025	2110	MHz
	RX band (ANT-2090-DUP)	1980	2010	MHz

10.3 Transmitter

Symbol	Description	Min.	Max.	Unit
Pow.level 2	Pout	32.0 (typ)		dBm
	Pout ripple	-2	1	dB
	Pin	-13	-3	dBm
	DC Power (typical) (Vin 10V)	8.9	10.0	W
Pow.level 1	Pout	29.8 (typ)		dBm
	Pout ripple	-2	1	dB
	Pin	-16	-6	dBm
	DC Power (typical) (Vin 10V)	6.1	7.1	W
Pow.level 0	Pout	26.8 (typ)		dBm
	Pout ripple	-2	1	dB
	Pin	-19	-9	dBm
	DC Power (typical) (Vin 10V)	4.0	4.5	W
Pin,thr	Threshold for input detector – rising	-33	-24	dBm
Pin,thr,hys	Hysteresis for input power det.	2		dB
Pout,min	Min. output power for automatic TX	8	16	dBm
Dup,Act	Auto duplex activation time		140	µSec

© 2026 GomSpace A/S
All printed copies, and all electronic copies and versions except the one accessible on the GomSpace A/S server, are considered uncontrolled copies used for reference only.

11 Antenna Performance

Figure below is a typical simulated radiation pattern, and a definition of the Phi and Theta angles used to describe the general antenna performance.

The antenna module includes connectors and matching circuit and has two feed ports which must be driven 90° out of phase to generate a circular polarized radiation.

On the electronics board a hybrid coupler generates the necessary quadrature signals. For the antenna measurements an adaptor board with the same hybrid coupler is used as test interface and the adaptor board loss (~0.30 dB) is compensated in the measurements.

Due to symmetry of the feed ports both circular polarizations will have the same performance and the results shown in this section with be based on RHCP data.

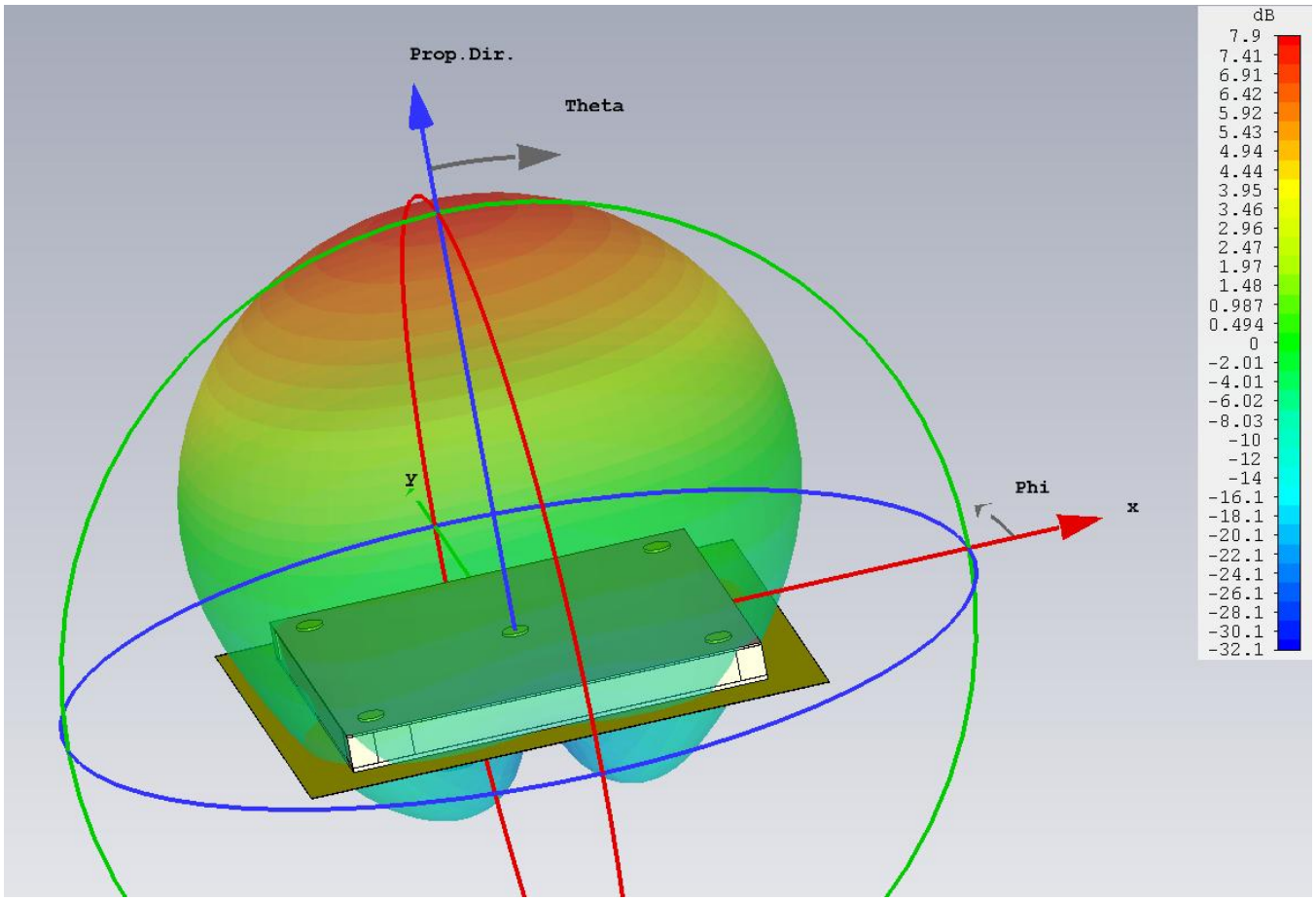

11.1

11.1.1 Antenna Gain

All antenna radiation measurements are with a Satimo Ring setup using a 98 x 98 mm aluminum ground plane. Below antenna gain (including connector) and radiation pattern for Phi=45° (diagonal across ground plane) is shown.

© 2026 GomSpace A/S
All printed copies, and all electronic copies and versions except the one accessible on the GomSpace A/S server, are considered uncontrolled copies used for reference only.

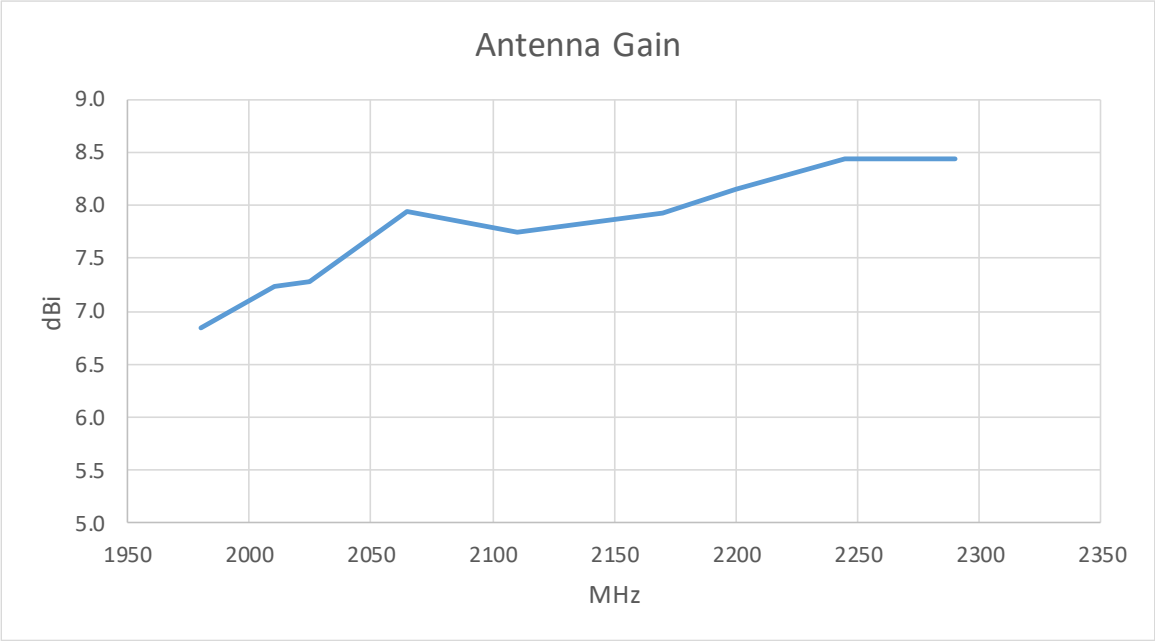

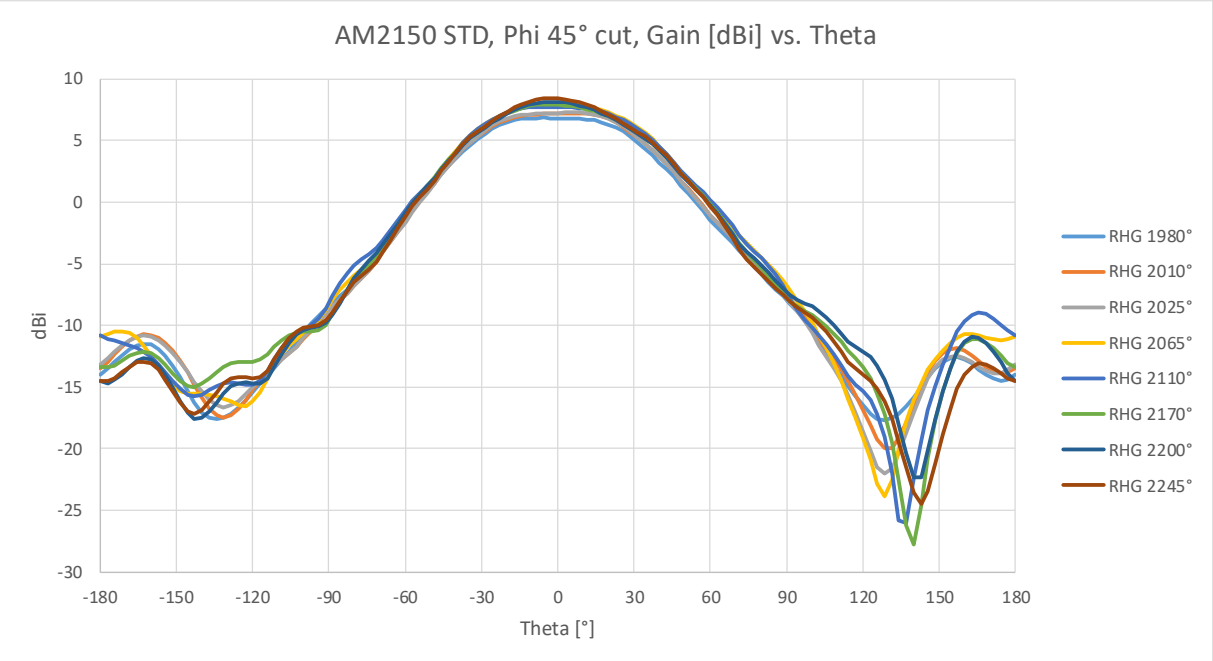

© 2026 GomSpace A/S
All printed copies, and all electronic copies and versions except the one accessible on the GomSpace A/S server, are considered uncontrolled copies used for reference only.

11.1.2 Axial Ratio

All antennas are circular polarized, and product polarization is determined by the electronics PCB.

Below the maximum axial ratio for -40...40° elevation is shown as a function of frequency, and the axial ratio as a function of Theta for a Phi angle of 45°.

As seen the axial ratio is quite good within the half power beamwidth.

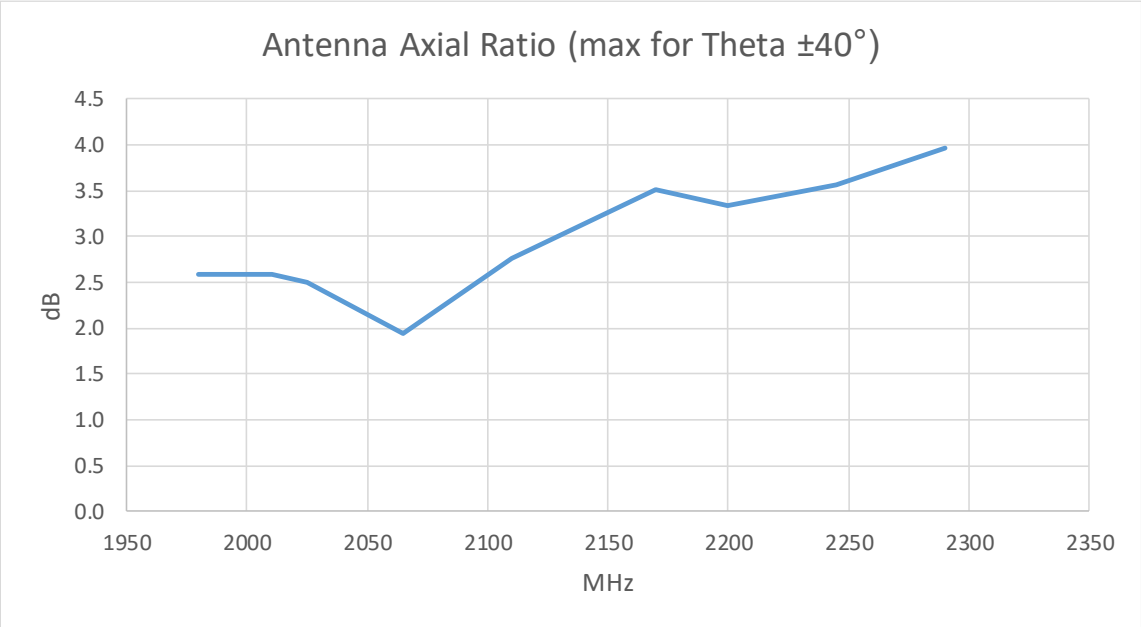

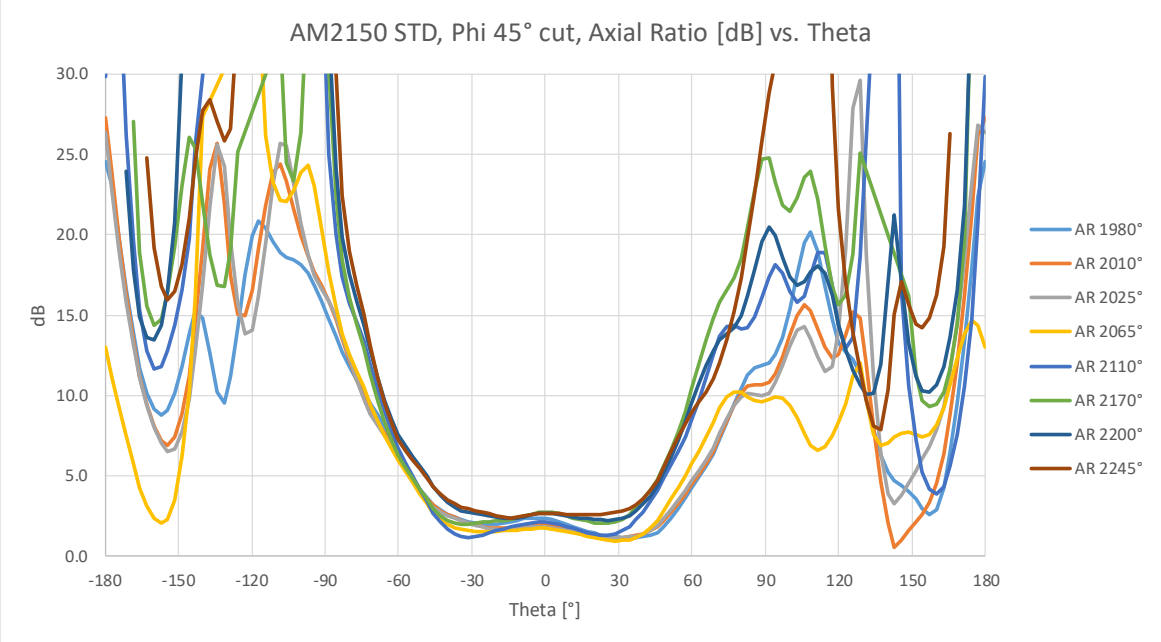

© 2026 GomSpace A/S
All printed copies, and all electronic copies and versions except the one accessible on the GomSpace A/S server, are considered uncontrolled copies used for reference only.

11.1.3 Half Power Beamwidth

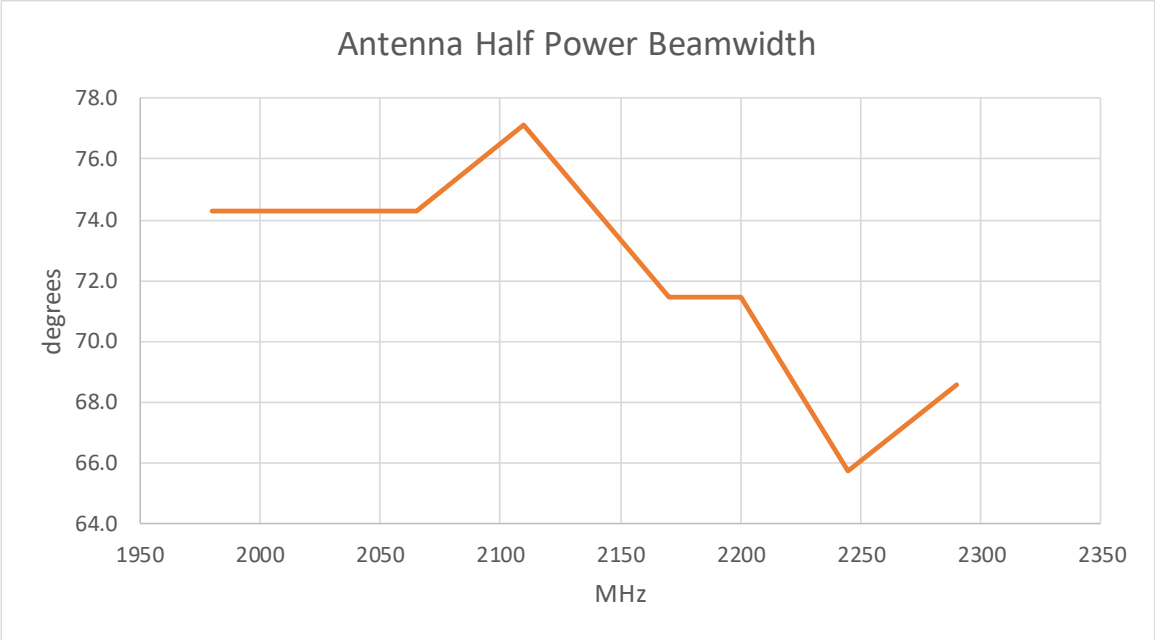

11.1.4 Port Matching

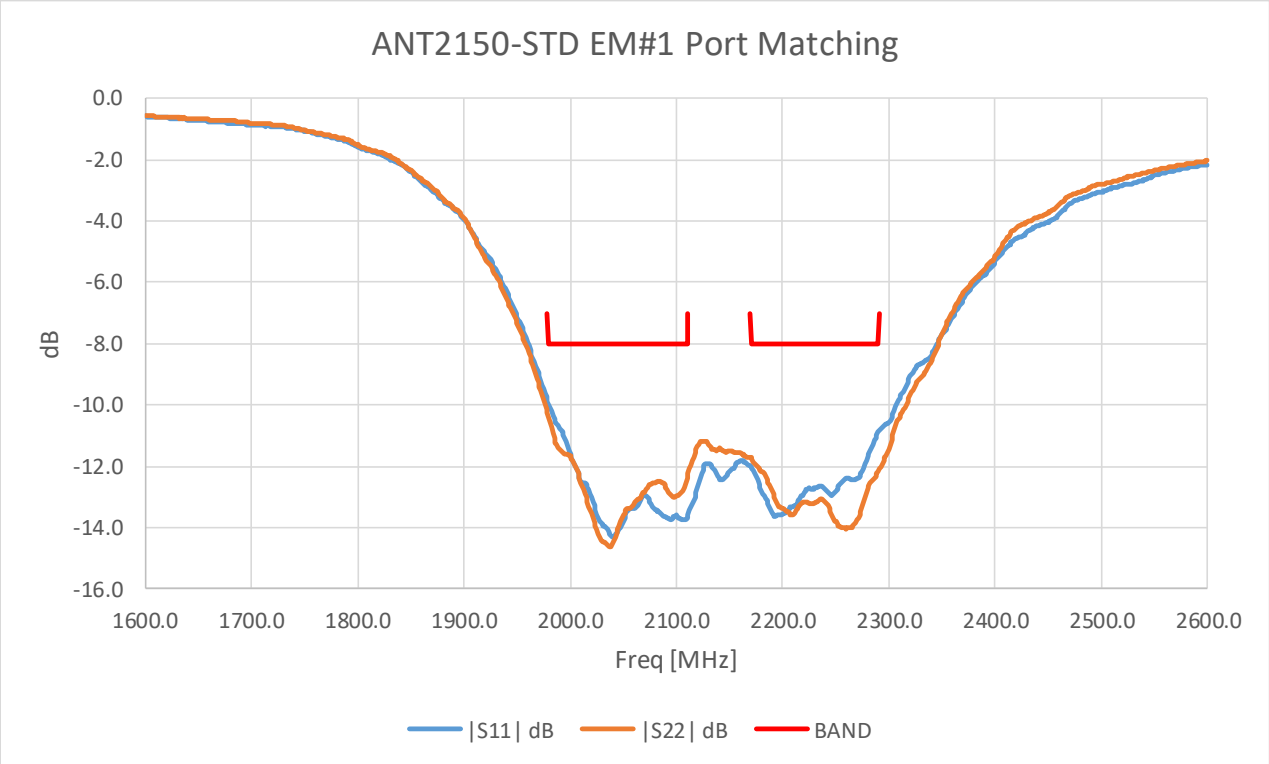

© 2026 GomSpace A/S
All printed copies, and all electronic copies and versions except the one accessible on the GomSpace A/S server, are considered uncontrolled copies used for reference only.

12 Mechanical Drawing

All dimensions in mm.

12.1 Type A

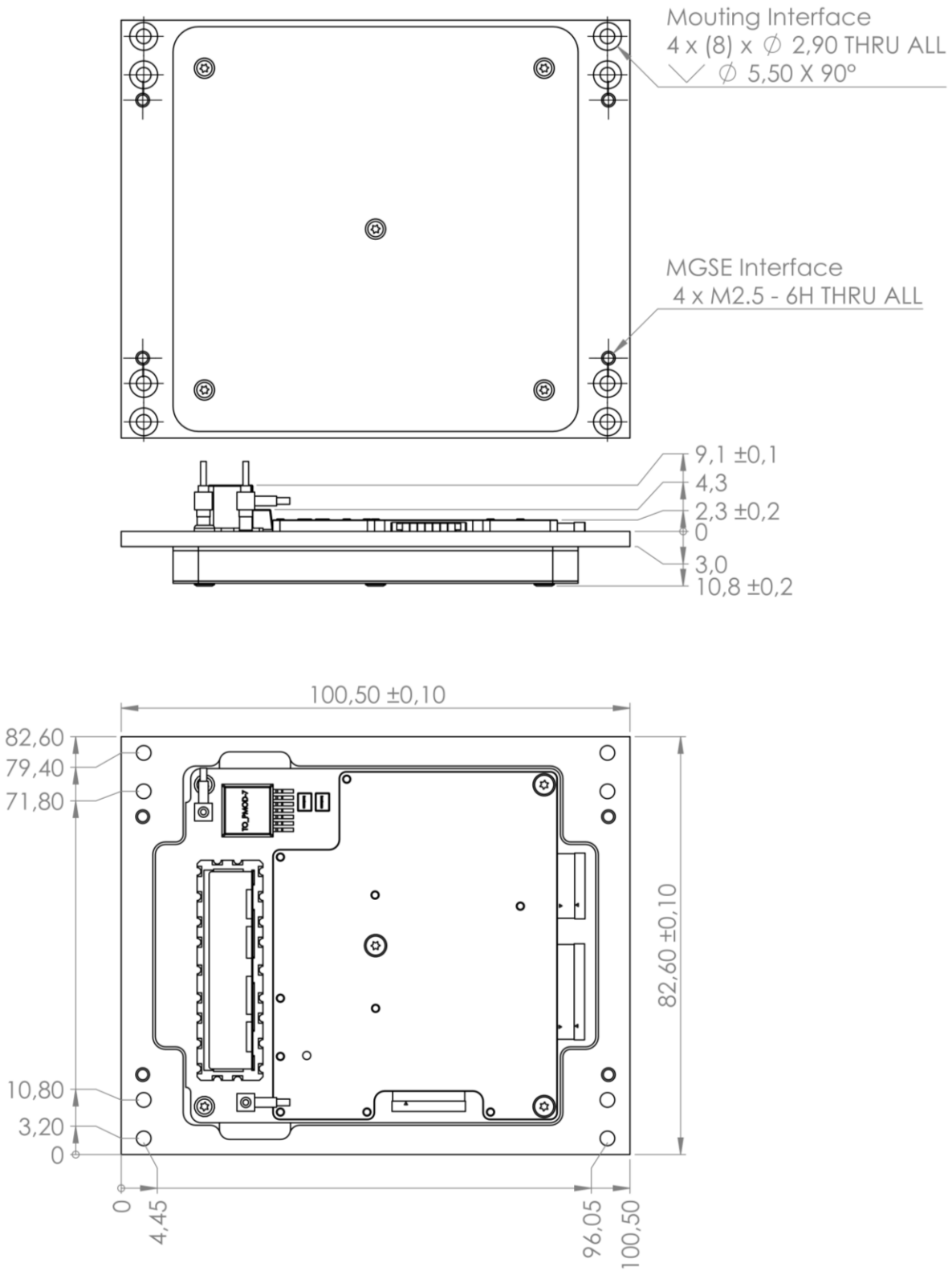

© 2026 GomSpace A/S
All printed copies, and all electronic copies and versions except the one accessible on the GomSpace A/S server, are considered uncontrolled copies used for reference only.

12.2 Type B

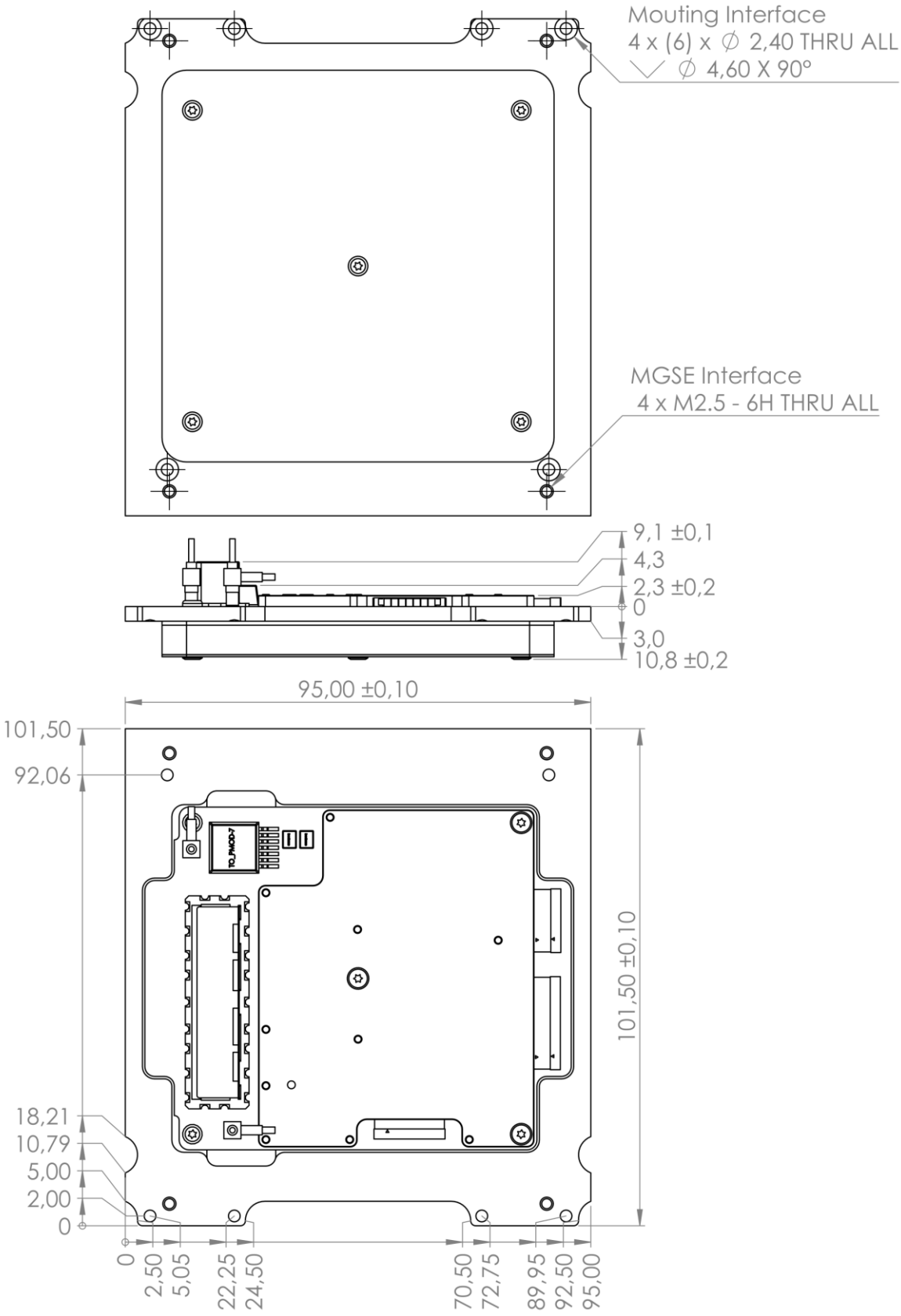

© 2026 GomSpace A/S
All printed copies, and all electronic copies and versions except the one accessible on the GomSpace A/S server, are considered uncontrolled copies used for reference only.

12.3 Type C

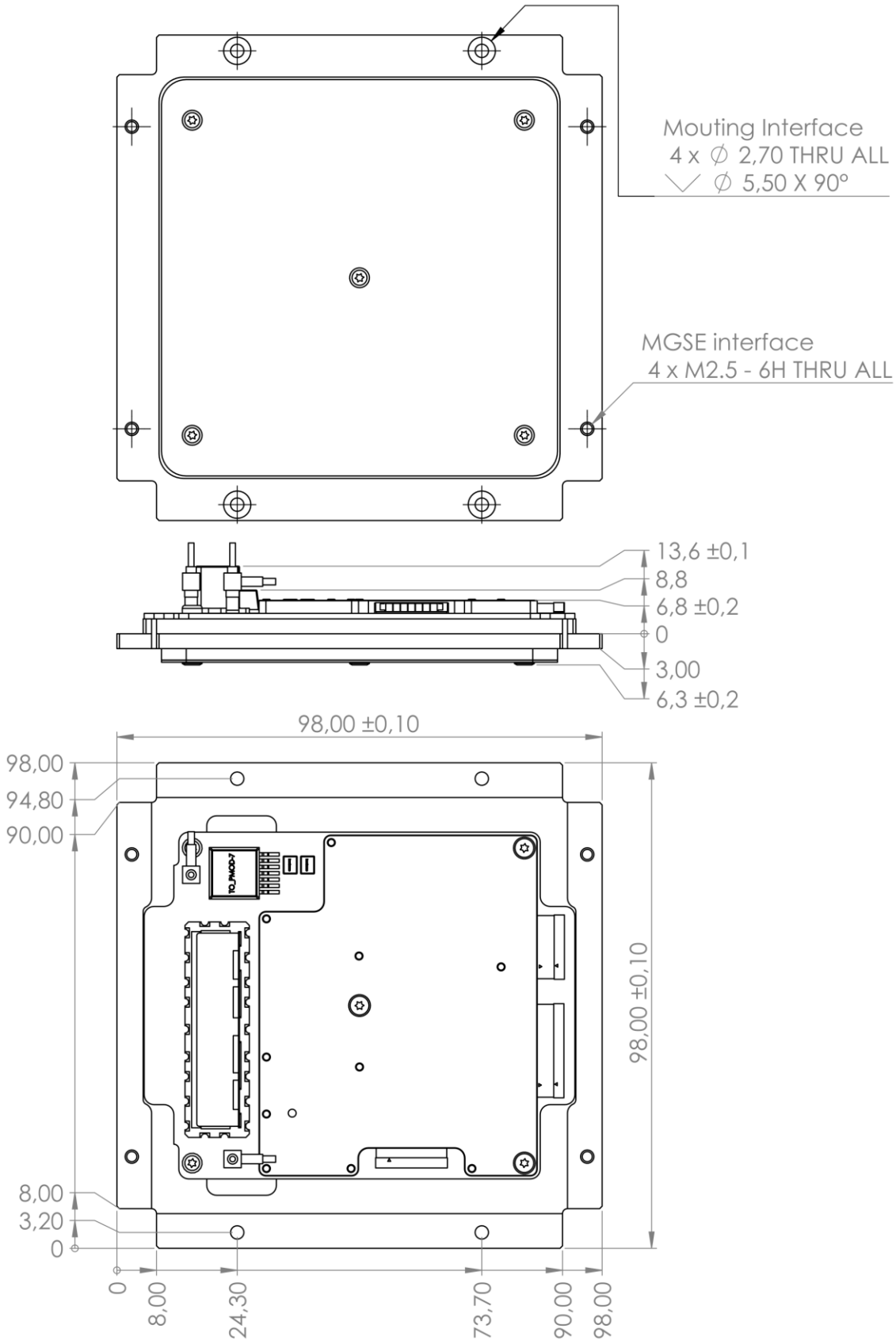

© 2026 GomSpace A/S
All printed copies, and all electronic copies and versions except the one accessible on the GomSpace A/S server, are considered uncontrolled copies used for reference only.

12.4 Type D

© 2026 GomSpace A/S
All printed copies, and all electronic copies and versions except the one accessible on the GomSpace A/S server, are considered uncontrolled copies used for reference only.

Disclaimer

The information in this document is subject to change without notice and should not be construed as a commitment by GomSpace. GomSpace assumes no responsibility for any errors that may appear in this document.

In no event shall GomSpace be liable for incidental or consequential damages arising from use of this document or the software and hardware described in this document.

© 2026 GomSpace A/S

All printed copies, and all electronic copies and versions except the one accessible on the GomSpace A/S server, are considered uncontrolled copies used for reference only.